

ZENITH IP65R

Item code	**86.D084.0423.02**
Product type	**Indoor**
Category	**Downlights**
Family	**ZENITH**
Subfamily	**ZENITH IP65R**
Pictograms	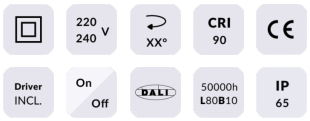

Dimensions	
Product dimensions (mm)	**Φ62*85mm**

Scheme

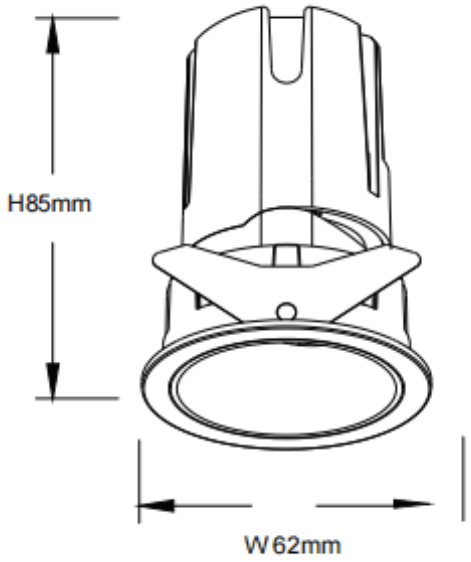

Product	
Real power (W)	**10**
Real luminous flux (Lm)	**800**
Luminous efficiency (Lm/W)	**80**
Beam angle (º)	**24**
Life time (h)	**50000 h L80B10**
IP	**65**
U. G. R	**19**
Control gear	**DALI**
Colour temperature (K)	**4000**
Colour consistency (SDCM)	**SDCM3**
CRI	**90**

Photometry

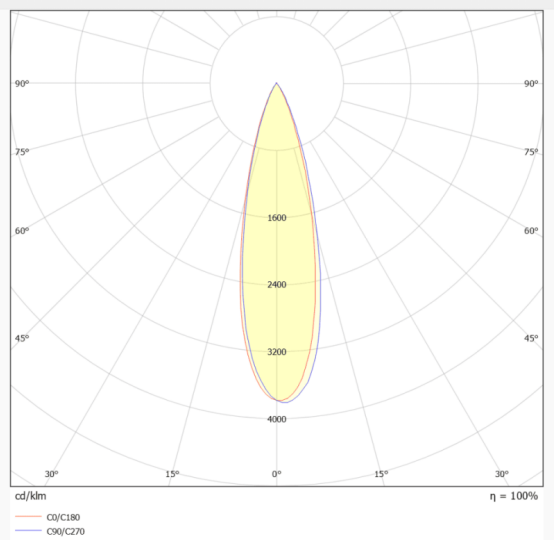
90°
90°
75°
75°
60°
60°
45°
45°
1600
2400
3200
4000
30°
15°
0°
15°
30°
cd/klm
η = 100%
C0/C180
C90/C270